Marchio / Brand ZUCCHETTI

Classe / Class DOCCE

# HOOP

ZHO823 Termostatico incasso doccia a 4 pulsanti. / Built-in thermostatic shower mixer, with 4 on-off buttons.

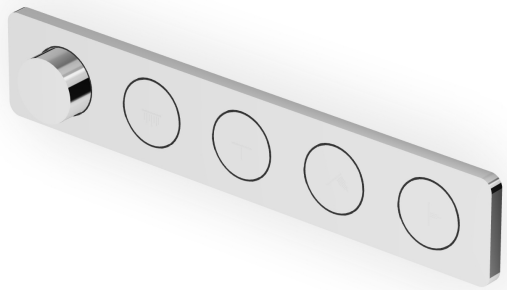

Termostico incasso doccia da 1/2", combinazione con 4 pulsanti on-off per soffione, doccetta, getto a lama e soffioni laterali. Installazione possibile sia in verticale che in orizzontale.

1/2" built-in thermostatic shower mixer, arrangement with 4 on-off buttons for shower head, handshower, blade jet and lateral shower head. Both vertical and horizontal installation possible.

R96704

Parte incasso / Built-in part



# HOOP

ZHO823

## Finiture / Finishes



Cromo / Chrome



**C3**

Nickel Spazzolato / Brushed Nickel



**C8**

Nickel Lucido / Polished Nickel



**C50**

Metal Black / Metal Black



**C51**

Metal Black spazzolato / Brushed Metal Black



**N6**

Nero opaco / Matt black



**P21**

PVD brushed chocolate / PVD brushed chocolate



**P30**

British Gold PVD / British Gold PVD



**P31**

Brushed PVD British gold / Brushed PVD British gold



**P41**

PVD Oro Spazzolato / PVD Brushed Gold



**P60**

Platino PVD / Platinum PVD



**P80**

Total black PVD / Total black PVD



**P81**

Brushed total black PVD / Brushed total black PVD

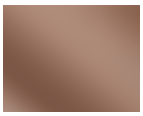

**P90**

Copper PVD / Copper PVD



**P91**

Brushed PVD Copper / Brushed PVD Copper



**J3**

Glossy gesso / Glossy gesso



**K7**

Pearl cipria / Pearl cipria



**R6**

Pearl chili / Pearl chili



**V7**

Pearl salvia / Pearl salvia



**V8**

Matt mirto / Matt mirto

## Note / Notes

# HOOP

ZHO823 Disegno Complessivo / Overall Drawing

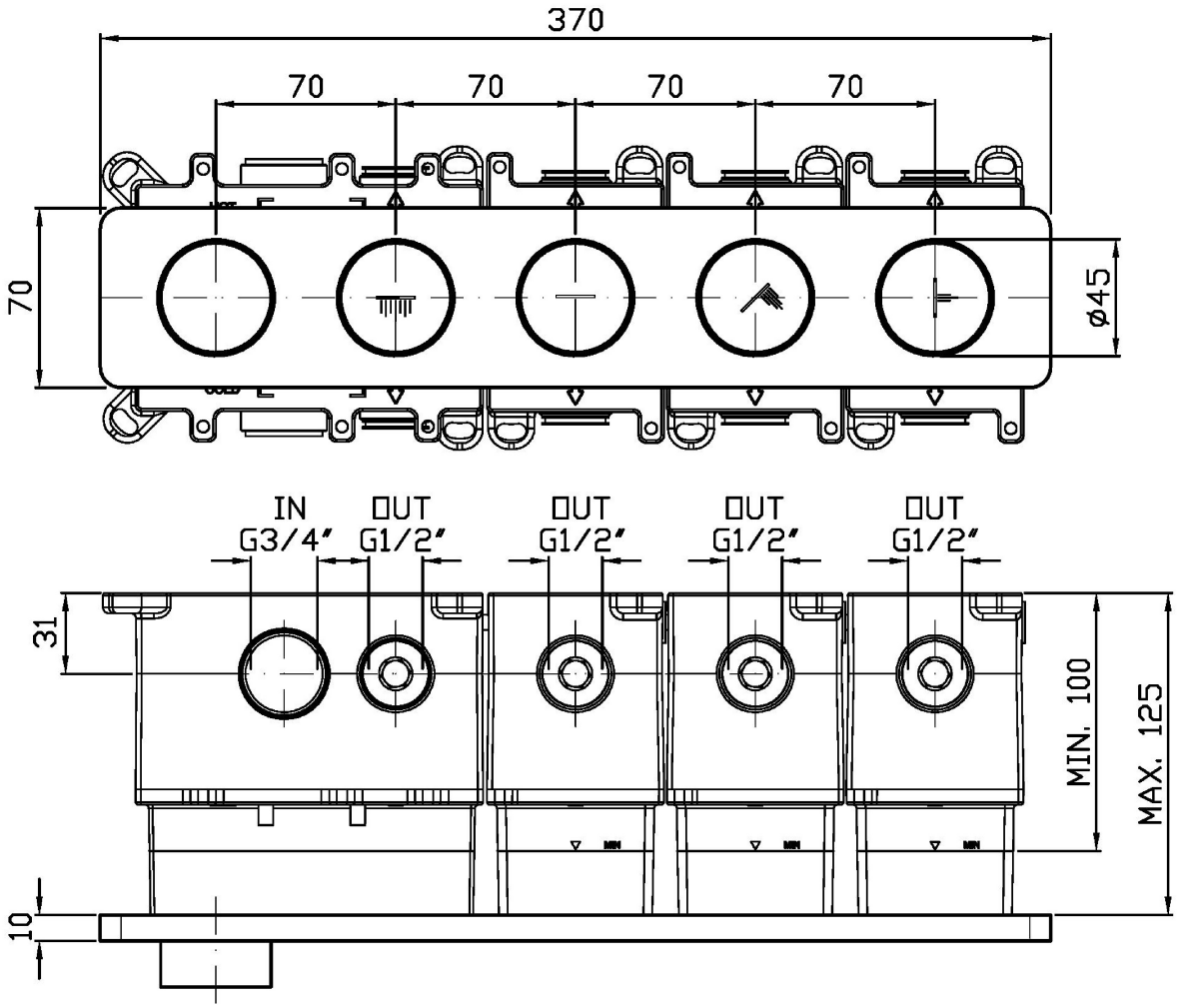

Marchio / Brand ZUCCHETTI

Classe / Class DOCCE

# HOOP

ZHO823 Esplosi / Exploded

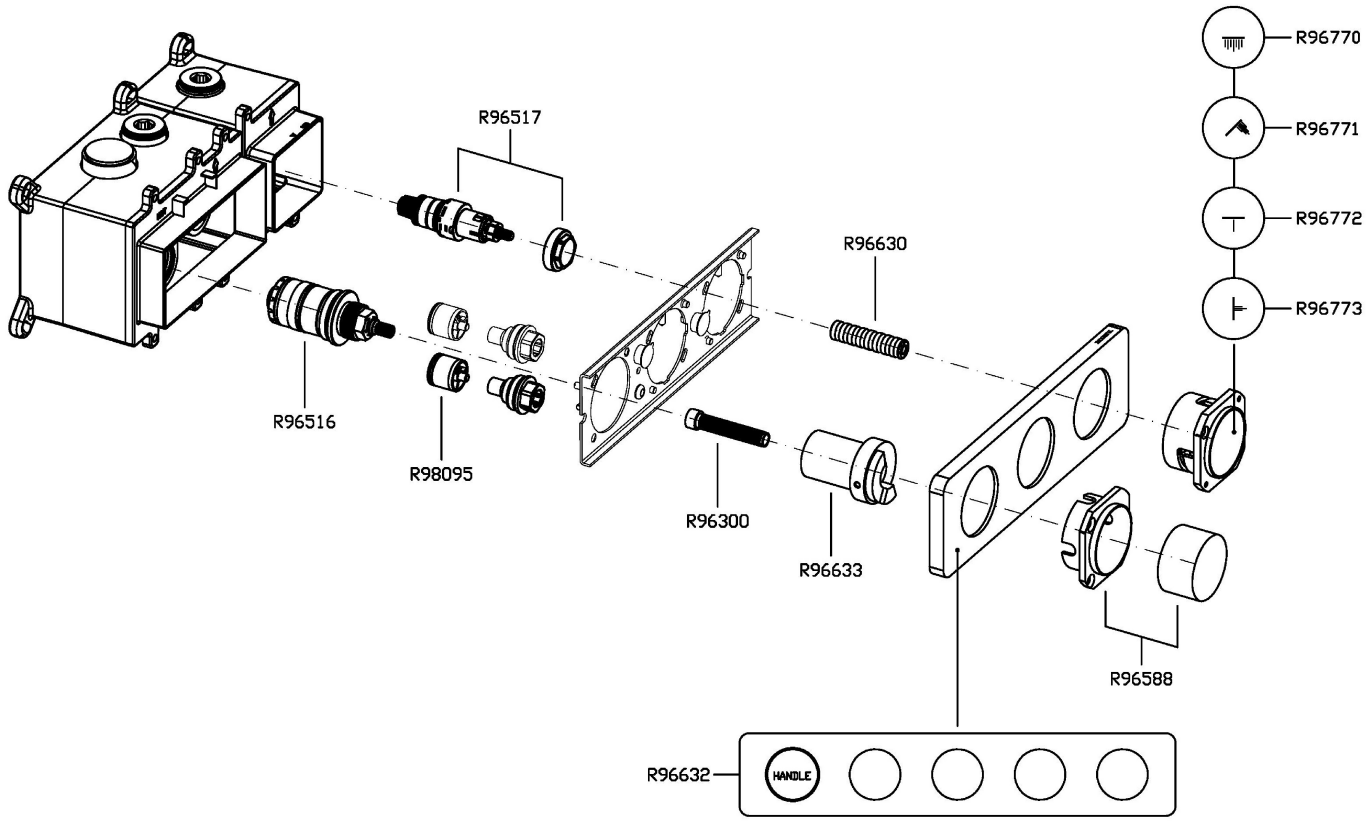

# HOOP

## ZHO823 Portate / Flowrates (lt/min)

| PRESSIONE PRESSURE | 1 BAR | 2 BAR | 3 BAR | 4 BAR | 5 BAR |
|---|---|---|---|---|---|
| P1 1 RUBINETTO APERTO 1 TAP OPENED | 7 | 11 | 13,5 | 15 | 16,5 |
| P2 2 RUBINETTO APERTI 2 TAPS OPENED | 10,5 | 16 | 20 | 23 | 26 |
| P3 3 RUBINETTO APERTI 3 TAPS OPENED | 11,5 | 17,5 | 22 | 25,2 | 29 |
| P4 4 RUBINETTO APERTI 4 TAPS OPENED | 13 | 18 | 23 | 26 | 30 |
| P5 | | | | | |

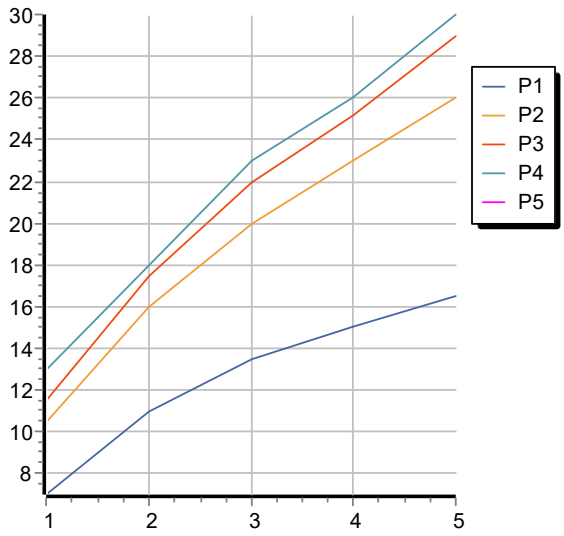


# HOOP

## ZHO823 Pesi e Misure / Weights and Sizes

| | | |
|---|---|---|
| Peso ( Kg ) Weight ( lb ) | 2,20 ( Kg ) | 4,85 ( lb ) |
| Volume test ( dc3 ) - ( in3 ) | 11,01 ( dc3 ) | 671,87 ( in3 ) |
| h ( mm ) - ( in ) | 90,00 ( mm ) | 3,54 ( in ) |
| L1 ( mm ) - ( in ) | 335,00 ( mm ) | 13,19 ( in ) |
| L2 ( mm ) - ( in ) | 365,00 ( mm ) | 14,37 ( in ) |

