Marchio / Brand ZUCCHETTI

Classe / Class WW

ISY22

ZIS3340 Batteria lavabo a 3 fori. / 3 hole basin mixer.

WATER SAVING



Batteria lavabo a 3 fori con aeratore, flessibili di collegamento, bocca girevole o bloccabile in fase di installazione. Senza scarico.
Water Saving - portata d'acqua uguale o inferiore a 6 l/min.

3 hole basin mixer with aerator, flexible tails, swivel spout or lockable during installation. Without pop-up waste.
Water Saving - water flow rate of 6 l/min or less.

Marchio / Brand ZUCCHETTI

Classe / Class WW

ISY22

ZIS3340

Finiture / Finishes



Cromo / Chrome



C3

Nickel Spazzolato / Brushed Nickel



C50

Metal Black / Metal Black



C51

Metal Black spazzolato / Brushed Metal Black



N6

Nero opaco / Matt black



P21

PVD brushed chocolate / PVD brushed chocolate



P31

Brushed PVD British gold / Brushed PVD British gold



P91

Brushed PVD Copper / Brushed PVD Copper

Note / Notes

Marchio / Brand ZUCCHETTI

Classe / Class WW

ISY22

ZIS3340 Disegno Complessivo / Overall Drawing

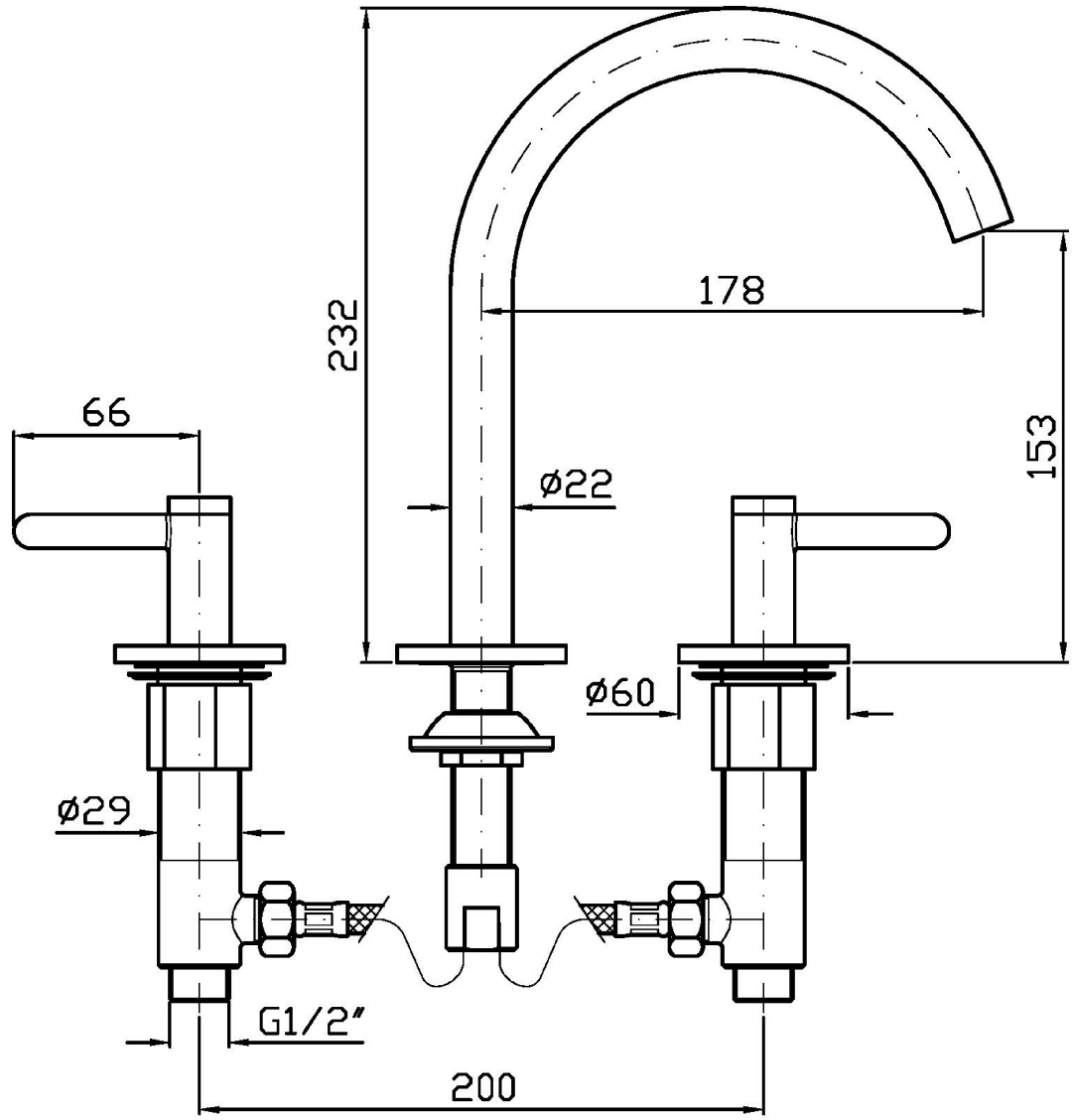

Marchio / Brand ZUCCHETTI

Classe / Class WW

ISY22

ZIS3340 Esplosi / Exploded

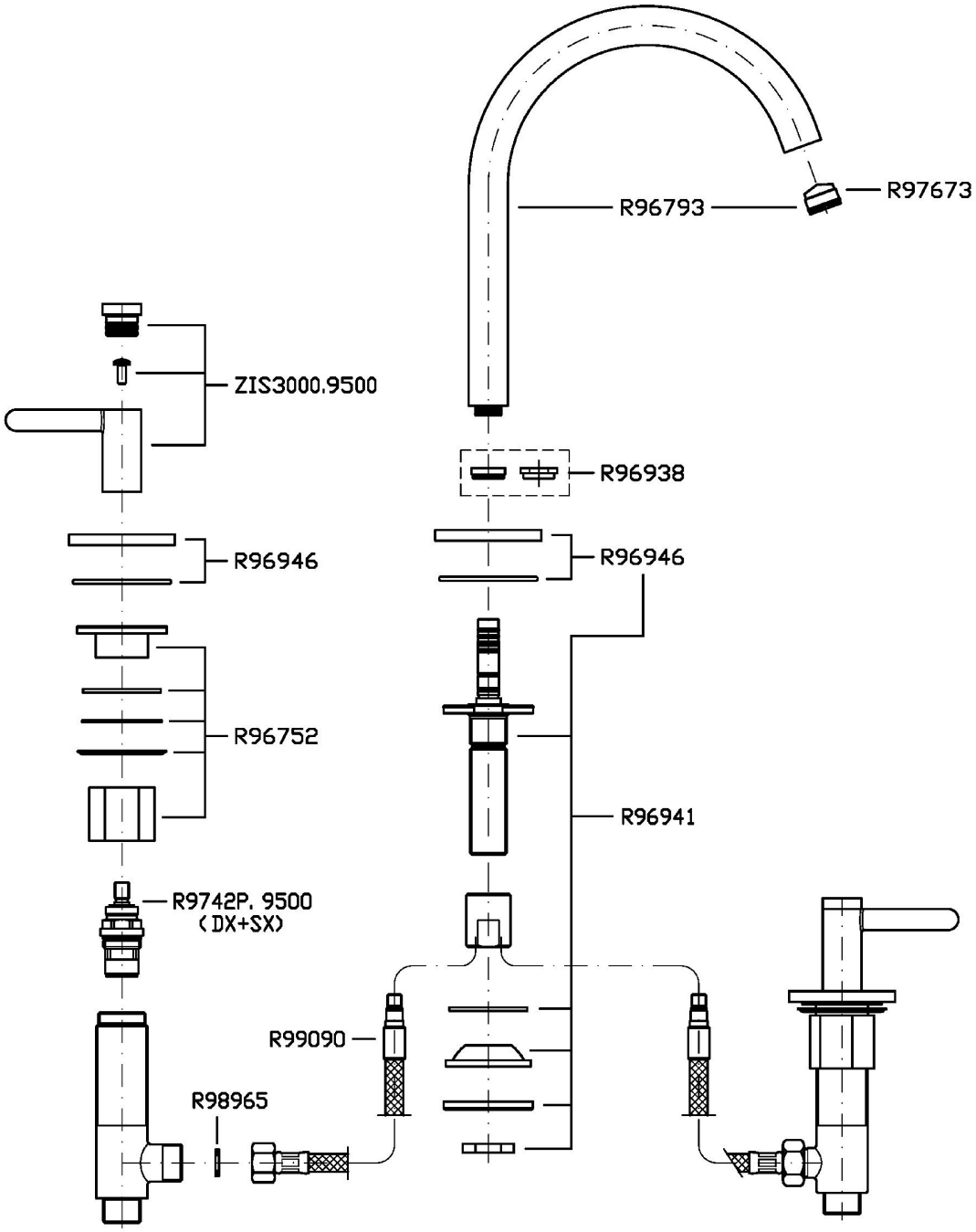

ISY22

ZIS3340 Portate / Flowrates (lt/min)

PRESSIONE PRESSURE	1 BAR	2 BAR	3 BAR	4 BAR	5 BAR
P1 LAVABO BASIN	**2,6**	**3,7**	**4,4**	**4,5**	**4,5**
P2					
P3					
P4					
P5					

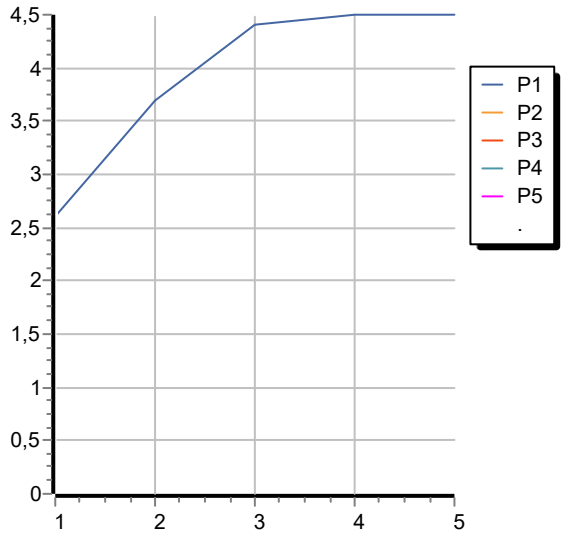

ISY22

ZIS3340 Pesi e Misure / Weights and Sizes

Peso (Kg) Weight (lb)	1,55 (Kg)	3,42 (lb)
Volume test (dc3) - (in3)	11,01 (dc3)	671,87 (in3)
h (mm) - (in)	90,00 (mm)	3,54 (in)
L1 (mm) - (in)	335,00 (mm)	13,19 (in)
L2 (mm) - (in)	365,00 (mm)	14,37 (in)

